ART. P076/025

CARBIDE TIPPED MASONRY CORE DRILL BIT HOLE SAW

FOR DRILLING MEDIUM AND LARGE HOLES IN THE WALL.

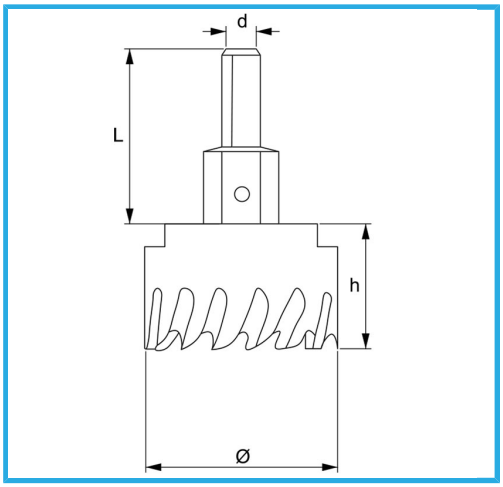

ø	25 mm
d	10 mm
Thread	M12 x 1.25
Z	3
L	46 mm
Boring bit	ø6 x 69 mm
Gross weight	0,13 kg
Packaging dimensions	32x32x110 h mm
EAN Code	8012667352592

Hangable

HSS -

HM -